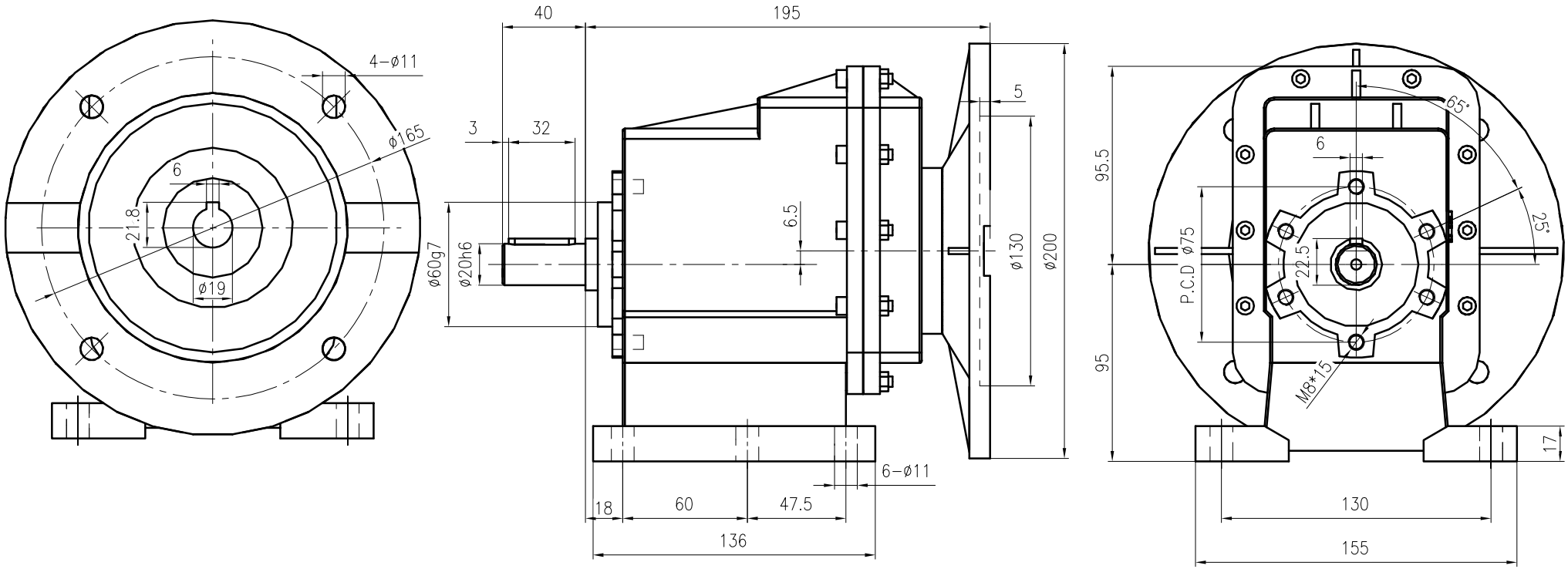


TRANSMISSION

E-RC01B02-80B5